Module Nitrogen Generator

- User Manual -



CATALOG

1． Technical Parameters

1.1 Design Parameters

1.2 Capability Parameters

1.3 Utilities

2 . Safety

2.1 Application

2.2 Preventing Accident

2.3 Danger Source

3 . Function and System Structure

3.1 Using CMS to separate air

3.2 Pressure Swing Adsorption

3.3 Process flow

3.4 Air compressor and purification system

3.5 Air Separation

3.6 Nitrogen Storage and Supply

4 . Installation

4.1 Installation Requirement

4.2 Normal Installation way

5 . Operation

5.1 Control System

5.2 Control process

5.3 Oxygen Detector

5.4 Start-up

5.5 Shut-down

6. Maintenance and Troubleshooting

6.1 Daily Check and Maintenance

6.2 Possible Malfunctions and Troubleshooting

6.3 List of spare parts

7. Appendix

7.1 Flow Diagram

7.2 Electrical Diagram

TECHNICAL PARAMETERS

1. Technical Parameters

1.1 Design Parameters

Requirement of Compressed Air ：

Compressed Air Flow:	≥2225CFH（63Nm^3/h）
Compressed Air Pressure :	≥101.5PSI（0.7MPa）
Compressed Air Dew Point:	35.6~50℉（2℃-10℃）

1.2 Capability Parameters

The Request of Nitrogen：

N_2 Flow	370.8CFH(10.5 Nm^3/h)
Purity	≥99.99%（anaerobic）
O_2 content	≤0.01%
N_2 Dew Point	≤-104℉ (≤-40℃）（atmospheric pressure）
N_2 Pressure	87PSI（0.6MPa）

1.3 Utilities

Power Voltage：	115V/1ph/60Hz
Power：	0.47hp(0.35kW)

SAFETY

2. Safety

It is necessary to thoroughly read this manual first before using the equipment, and operate and maintain it strictly according to instructions so as to avoid causing of equipment breakdown.

2.1 Application

PSA nitrogen generator system is designed with flow and purity described in chapter 1.2. However, without the permission of GSE**.** may not be changed as follows：

·Setup changing goes beyond the limitation stated in part

1.2 ·Changing Hardware setup in system

If the above situations happen, the quality-guarantee is invalid.

2.2 Preventing Accident

All standards of preventing accidents are prescribed by Legal department of country. Operator should be complying rigorously.

3.3 Danger Source

Healthy Harm！

SAFETY

Compressor, dryer and PSA System may run automatically under the mode of automatic manipulation. Therefore, before maintenance, the whole system and all parts of system must be shut down.

Fire！

Waste gas generated by the system contains nearly 35% highly concentrated oxygen, it is easy to cause fire. Thus this machine should be placed outdoors or the place with good ventilation, and smoking is strongly prohibited.

Asphyxia!

Nitrogen which generated by the machine will not provide enough oxygen for breathing. Thus product gas should not be used to breath.

Healthy Danger！

All parts of the equipment and pipelines are in high pressure and gas will expand immediately when disassembling and cause directly or indirectly damage to humans. So, high pressure gas in all vessels and pipelines should be released before maintenance.

FUNCTION AND SYSTEM STRUCTURE

3. Function and System Structure

Nitrogen will be generated by separating Oxygen from air through **Pressure Swing Adsorption** technology.

3.1 Using CMS to separate air

CMS (Activated Carbon Molecular Sieve) is a specially treated material. It is used to separate air.

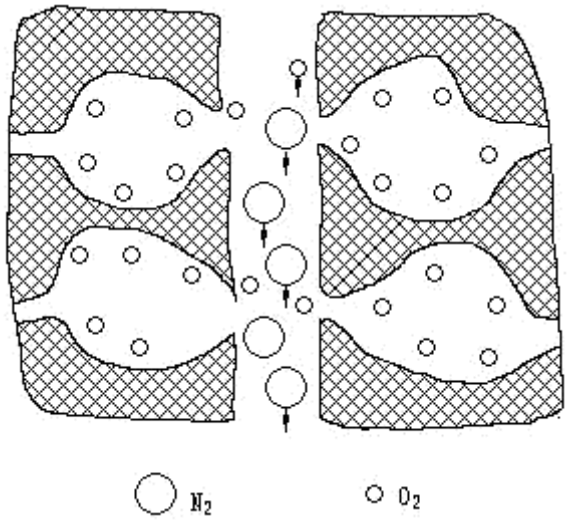

drawing 3.1 Separating Air（CMS）

The diameter of the holes in CMS is between the diameter of nitrogen molecule and oxygen molecule. It is because of oxygen molecule's bulk is smaller and lighter than nitrogen molecule that oxygen is Adsorbed prior to nitrogen. See drawing 3.1.

3.2 Pressure Swing Adsorption

More and more molecules will be adsorbed in the surface of CMS, see drawing 3.2.

RUCTURE

from the bottom to the top of the

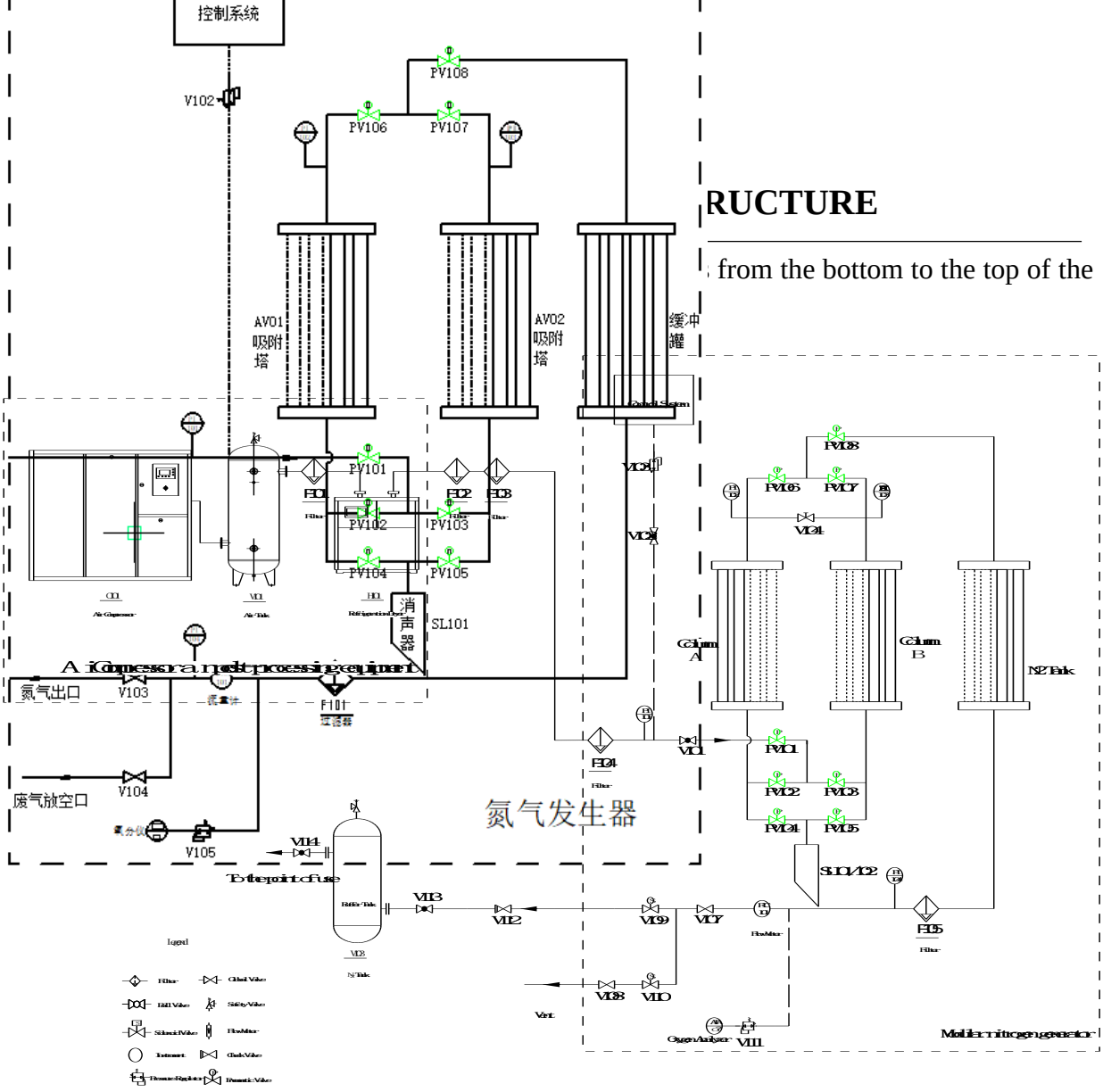

drawing 3.2 Pressure Swing Adsorption（PSA）

The adsorption tower is filled with molecular sieves and when the gas goes through from the bottom to the top, the oxygen molecule and nitrogen are both adsorbed on the surface of the molecular sieves. However, the quality of oxygen is more than nitrogen molecules. In that way the nitrogen gas goes from the outlet from the tower while most oxygen is adsorbed.

The adsorption time depends on the airflow rate. The relation is explained as following:The higher air flow rate and shorter adsorption time will result in higher nitrogen concentration.

★ The lower air flow rate and longer adsorption time will result in lower nitrogen concentration.

When adsorption of adsorbent reaches to saturation, it needs regeneration. The regeneration is caused by decompression. Due to the features of gas adsorption, it provides de-adsorption under low pressure. Therefore the adsorption and regeneration of adsorbent can be repeated according to the principle stated above, assuring the continuous production. When one absorber is regenerating, the other absorber is in working.

3.3 Process flow

PSA Nitrogen Generator Process can be divided into three units:

· Air compressor and purification system

· Oxygen and nitrogen separation unit

· Nitrogen storage and supply

3.4 Air compressor and purification system

The compressed air (about 116PSI (0.8 MPa)) first enter into the 9 grade filter to remove most water, other condensed liquid which is larger than 3μm (remnant oil less than 5ppm w/w). Then the refrigeration dryer will take most oil, water and dust from compressed air. The latter 7 grade filter will further remove the liquid water, oil and solid granule which is larger than 1μm (Remnant oil less than 1ppm w/w).

Next step, the 3 grade filter will remove solid granule larger than 0.01ppm w/w). Finally, the 1 grade filter will absorb oil vapor and hydrocarbon vapor to 0.003ppm

0.01μm(Remnant oil less than w/w, which meets the demand of PSA system.

Under rated running conditions, the 1 grade filter can normally work continuously for more than 4000 hours.

After activate carbon tank, the compressed air will reach the required specifications:

- Oil remaining amount in the air: ≦0.003mg/m^3 (70℉(21℃))
- Solid particulates dimension: ≦0.01μm
- Moisture remaining amount in the air: ≦5.57g/m^3

The condensed water from compressed air will discharged to specific place through pipeline.

3.5 Air Separation

After air purification system, compressed air enters into Adsorber A or B for adsorption through pneumatic valve PV102 or PV103.

Adsorption column A or B with carbon molecular sieve, is the main part of the nitrogen generator, the oxygen and nitrogen separation is done here.Carbon molecular sieve compressing adopt automatic pressing device .

The whole process flow is controlled by 8 valves from PV101 to PV108. See the Table 3-1.

FUNCTION AND SYSTEM STRUCTURE

3-1 Periodic Procedures

Status	Valve Opening	Description
Adsorption in A and regeneration in B	PV101、PV102、PV106、PV108、PV105	Adsorption and separation in A and regeneration in B
Pressure balance in A and B	PV102、PV103、PV106、PV107	Pressure balance of these two towers, adsorption and preparation for regeneration
Regeneration in A and adsorption in B	PV101、PV103、PV107、PV108、PV104	Regeneration in A and adsorption and separation in B
Pressure balance in A and B	PV102、PV103 PV106、PV107	Pressure balance of these two towers, adsorption and preparation for regeneration

3.6 Nitrogen Storage and Supply

· Nitrogen storage tank :

Material: carbon steel, easy to clean, pipe material selection of stainless steel, the welding is reliable.

In accordance with, "container safety supervision regulation of pressure vessel" implementation design, a nitrogen tank and pipeline design pressure is greater than or equal to 145PSI (1.0MPa).

Buffer, by PSA process caused by pressure fluctuation that adsorption tower A and B in adsorption at the start of the pressure minimum.

Ensuring the adsorption tower, A and B in adsorption at the start of the minimum pressure value, its role is buffered by PSA process caused by pressure fluctuation.

The nitrogen flow is adjusted by manual valve V107 through flow meter F101 and then enters application point. The flow meter F101 shows the real flow that output.

The device configuration on gas flow meter, product function, unit L/min.In general, the flow-meter calibration under normal conditions, specific conversion as follows:

The sampling pipe was installed in nitrogen outlet to detect the nitrogen purity.

INSTALLATION

4.1 Installation Requirement

1）Clean and dry compressed air

2) 120V/60Hz power

4.2 **Normal installation way**

The nitrogen generator should be laid on the tidy and horizontal ground. A place with good ventilation is needed. If it is placed in a sealed area, air with over-oxygen and unqualified nitrogen should be emitted outdoors with pipes.

5. Operation

5.1 Control system

SIEMENS CPUSR30 Type PLC is applied to this control system. 8 pneumatic valves will be controlled by the PLC. Oxygen analyzer detects oxygen concentration and when the concentration exceeds the setting value, the PLC will alarm to call attention to the manipulators to open the unqualified gas outlet valve and close the nitrogen outlet valve to prevent unqualified nitrogen going to the next system.

5.2 Process Control

·Main Process Control :

The system is composed of PLC and pneumatic valves PV101- PV108. Pneumatic valves open and close as programmed to accomplish adsorption, regeneration and pressure balance of the PSA system.

·Instruction to Control Panel :

Control cabinet operation panel on the touch screen display, pressure gauge,. See drawing 5-1.

OPERATION

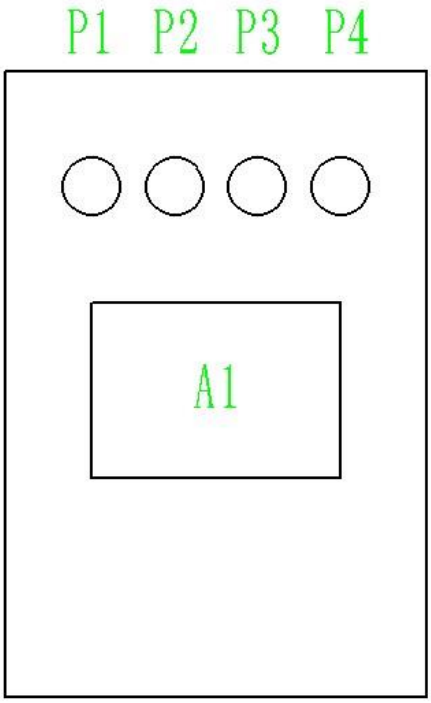

Drawing 5-1 Control panel display

1. HMI （A1）

Display all the valve working condition as well as the adsorption time.

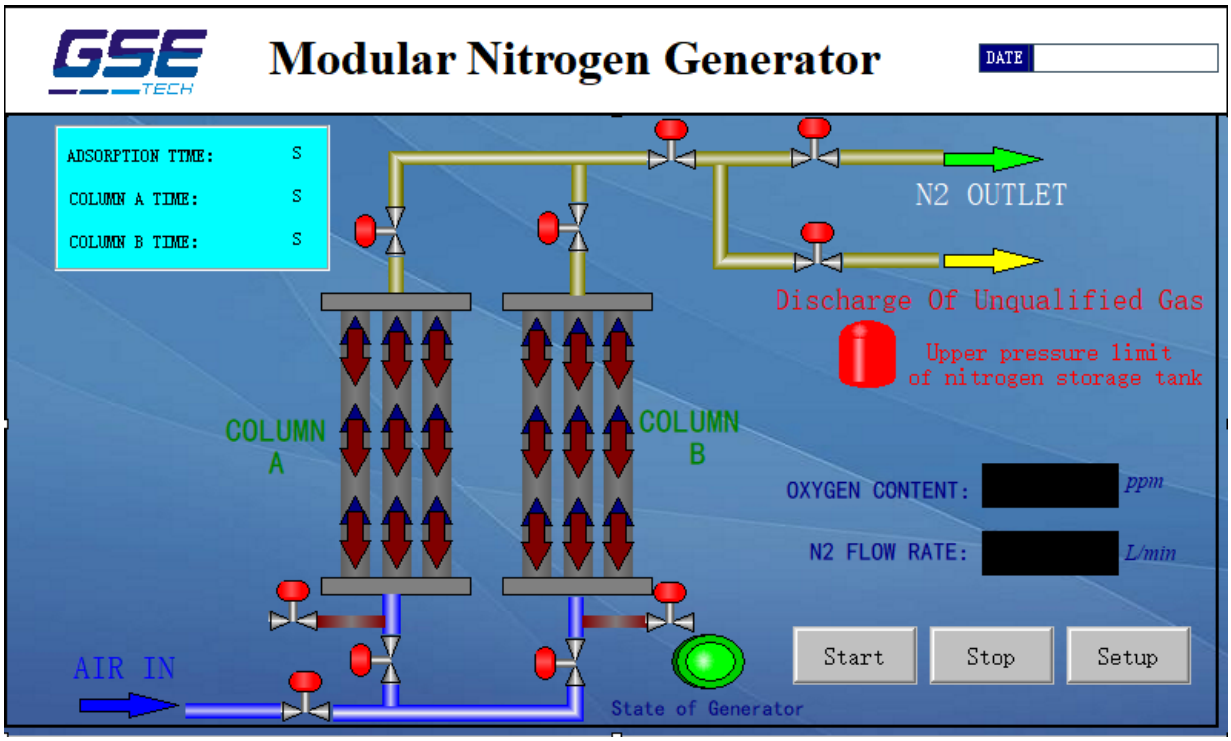

Press“Start”--N_2 Generator start to work.

Press“Stop”--N_2 Generator stop work.

Press“Setup”--Parameter setting.

Oxygen Content: ppm of oxygen content in N_2

N_2 Flow Rate: Flow rate of N_2 out

State of Generator: Green,PLC work,N_2 Generator work;Red ,PLC stop work,N_2 Generator stop work;

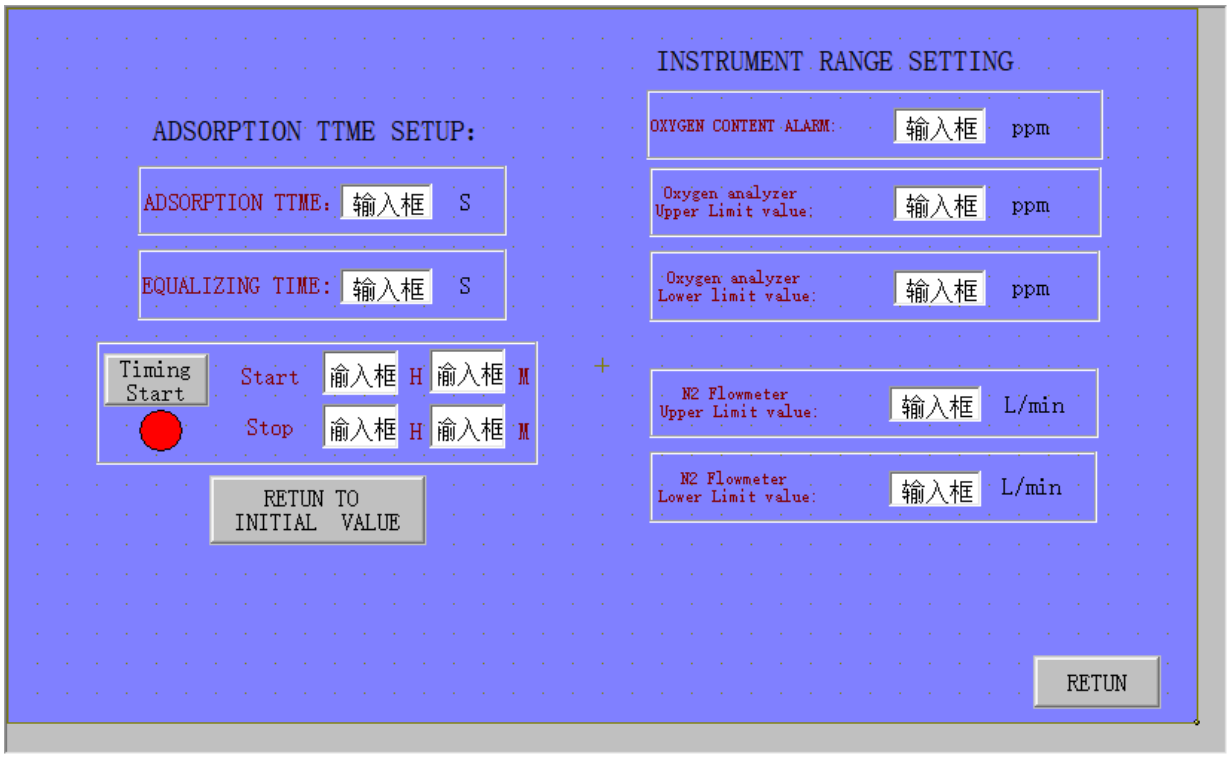

Setup LOGON： admin password:68213687

2.Pressure gauge(P1、P2、P3、P4):

P1-P4 show the Pressure of Air Inlet; adsorber tower A; adsorber tower B and nitrogen tank

5.3 Oxygen analyzer

The remnant oxygen content is detected by the oxygen analyzer continuously

The sampling pipe is composed by:

·The relief valve to adjust the sampling gas pressure ·The regulating valve to adjust the sampling gas flow

Detect the remnant oxygen content：

1. Adjust the sampling pressure to 14PSI (0.1MPa)
2. Adjust the sampling flow till the gas can be felt
3. The oxygen content can be obtained when the reading is stable

To keep the oxygen analyzer in precision, Calibration is needed regularly. At the meantime, the sampling flow and pressure should be checked in a fixed time. See the instruction of the oxygen analyzer.

Caution:There are three minutes for oxygen analyzer preheat from the Power ON. During this period, it is forbidden to start the nitrogen generator,otherwise the valve will act abnormally.

5.4 Start-Up:

1) Start the air compressor and make it meet the requirements of this machine (required conditions). Open the inlet valve of nitrogen equipment and adjust the pneumatic valves gas source valve to 73~87PSI (0.5-0.6MPa).

2) Turn on the switch of nitrogen generator and oxygen analyzer on the control panel. Then set the allowed max value on the oxygen analyzer. Whether they two adsorption towers work normally are judged by the pressure switch between the two towers. During normal working, the pressure of the adsorption tower should be almost the same as the compressed air (perhaps lea than 7PSI (0.05MPa)) while the regeneration pressure is 0. At the balance stage, the two towers has the same pressure (about a half of the adsorption pressure).

3) Turn on the oxygen analyzer and open the sampling valve to regulate the pressure to 14.5PSI(0.1MPa). And then adjust the sampling flow till the gas can be felt by hands. Notice the sampling flow should not too large.

4) The purity and flow rate of nitrogen can be adjusted by adjusting the opening of nitrogen outlet valve V107.

5.5 Shut Down:

(A) Press “STOP”

(B) close nitrogen product outlet valve and sampling valve.

(C) Inlet valve of compressed air shall be closed.

(D) Switch of nitrogen machine shall be turned off.

POSSIBLE MALFUNCTIONS AND TROUBLESHOOTING

6.1 Daily Maintenance and inspection

Inspection	Inspection method	Rated value	Period
Filter			
Discharge	Check whether there is effluent from the discharge outlet		Daily
Clean of the build-in discharge valve	Take the valve apart and clean in neutral solution		Every week
The compressed air buffer tank			
Pressure gauge	Check whether the pressure is in normal range		Daily
Discharge valve	Check whether there is effluent from the discharge outlet		Every two hours
PSA System PSA			

Oxygen analyzer	Check the sampling flow and pressure, if needed, adjust them.	The gas can be felt by hands	Daily
Flow meter	Check the flow meter and adjust it if needed. The flow should not be larger than the rated flow		Daily
Pressure gauge	Check whether they work normally		Daily
Nitrogen pipeline	Make sure there is no leakage		Every three months

Note: See the instruction of the compressor and dryer to get the maintenance method.

CAUTION: The nitrogen generator must be shut down when the compressor or dryer has fault.

POSSIBLE MALFUNCTIONS AND TROUBLESHOOTING

6.2 **Possible Malfunctions and Troubleshooting**

Appearance	Possible reasons	Treatment
Analyzer alarm O_2	Nitrogen flow too high	Check the nitrogen flow
	Set value not correct	Check the set value
Pneumatic valve can not open	PLC problem	Check whether the PLC output light is on, if not, the PLC should be changed to a new one
	Gas source pressure too low	Make sure the gas source pressure larger than 4bar, or check whether there is any leakage
	The valve rod get stuck	If there is no the above appearance, take the copper pipe joint apart from valve and check weather there is gas from copper pipe. If yes, take the head apart from the valve and force the rod move up and down several times.

	The solenoid valve coil is burnt	If there is no the above appearance, Check the corresponding solenoid valves and check whether the wiring is fixed or not. If the coil is burnt, change the solenoid valve.
There is a lot of black dust from Muffler or flow meter	The activate carbon or molecular sieves is disclosed	Contact us
Nitrogen flow is not enough while the Pressure is normal	The terminal filter or check valve is stuck	Take them apart and clean, change a new one when they are not maintainable

6.3 List of spare parts

S.N.	Name	Number	PCS	Replacement cycle	Remark
1	Air Filter element	180238	1	Half a year	F104
2	N_2 Filter element	180213	1	a year	F105
3	Silencer	180004	2	a year	SL101/102
4	Pressure reducing filter	180679	1	2 years	V103
5	Solenoid valve	181421	8	5 years	
6	2-way Pneumatic valve	180002	8	5 years	PV101-PV108
7	Oxygen analyzer	180540	1	5 years	AIA O2
8	CMS	180648	N	8 years	

APPENDIX

7. Appendix

7.1 Flow Diagram

7.2 Electrical Diagram